GROUP 9 - ENGINE

The standard engine for the C-300K is a Firepower 360, having a high performance camshaft and valve springs with surge dampers, hydraulic tappets, a single 4-barrel carburetor, low restriction air cleaner and dual exhausts.

The optional engine for the C-300K is a Firepower 390 (Fig. 5) using a high performance camshaft with mechanical tappets, heavier valve springs and surge dampers, two 4-barrel carburetors, (Fig. 6) ram manifolds, low restriction air cleaners, (Fig. 7) dual exhausts with a balancing tube between the exhaust pipes.

The service procedures are the same as those outlined in the 1964 Imperial and Chrysler Service Technical Manual with the following exceptions:

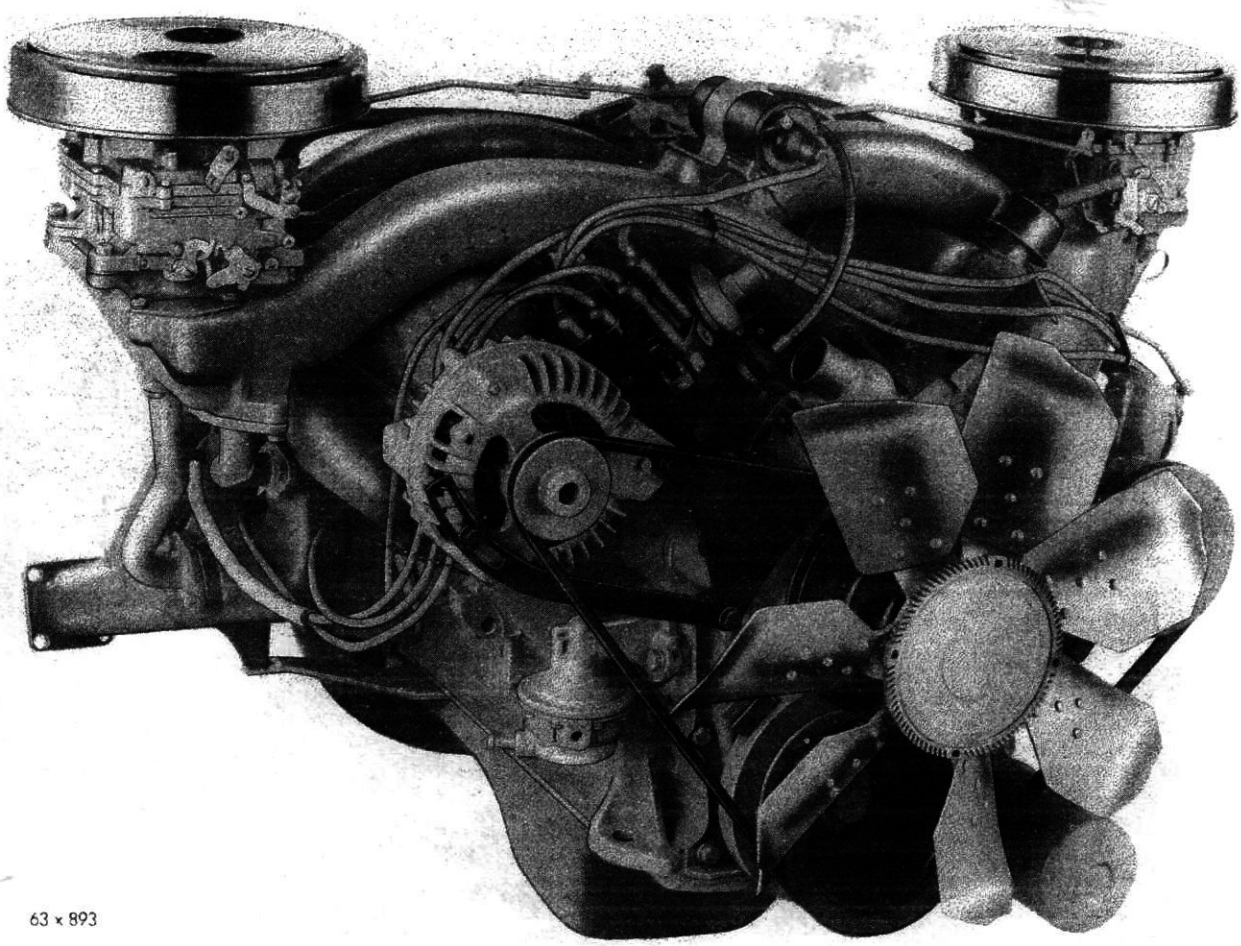

Fig. 5 - FirePower 390 Engine

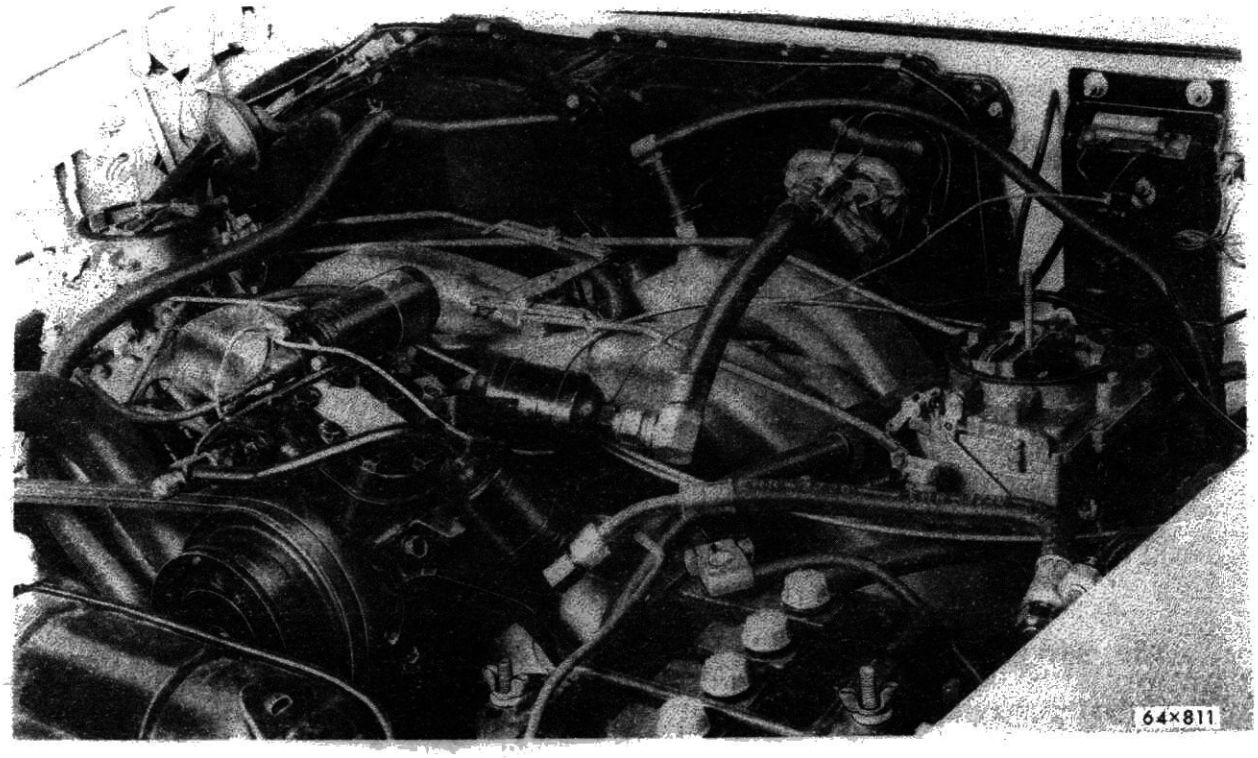

Fig. 6 - Right View Firepower 390 Engine
with Air Conditioning

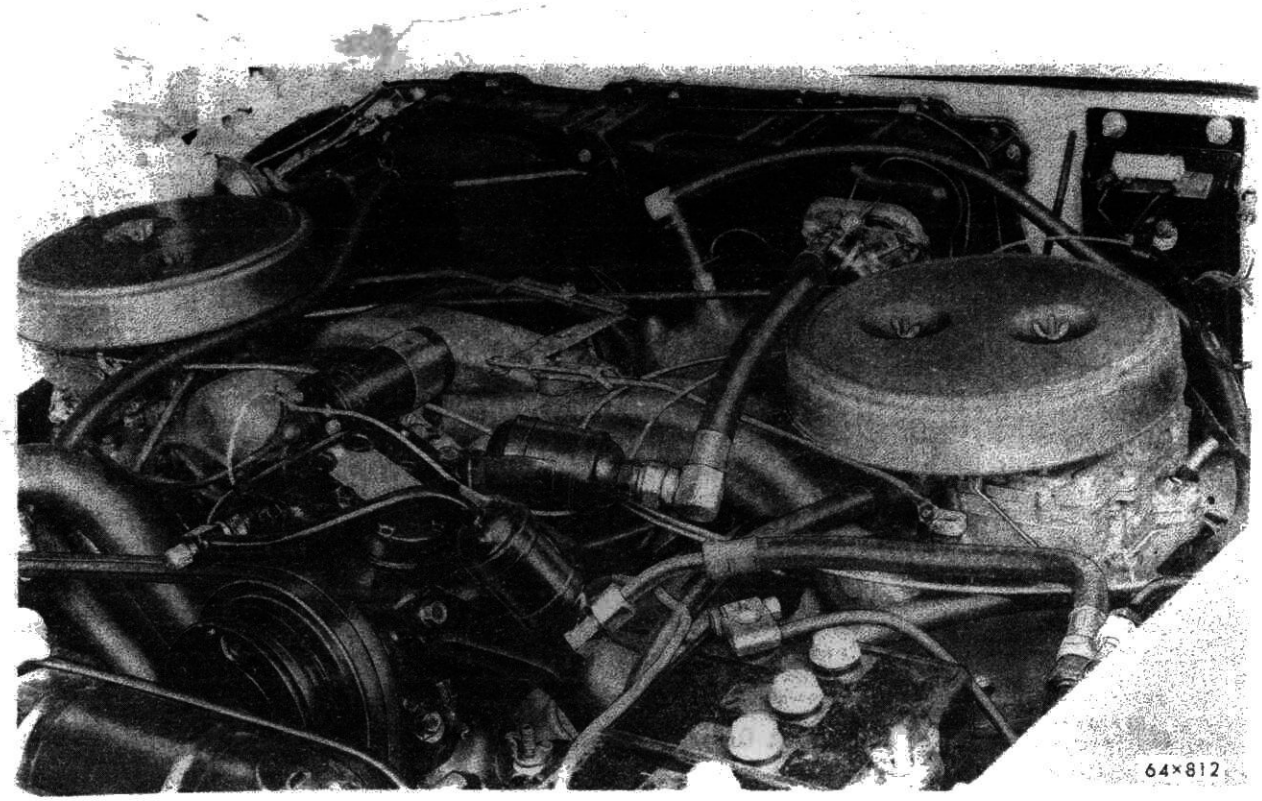

Fig. 7 - FirePower 390 Engine with Carburetor
Air Cleaner Installed and Air Conditioning

ENGINE SPECIFICATIONS

	FirePower 390	FirePower 360
Type	90° V	90° V
Number of Cylinders	8	8
Bore (413 Cubic Inch Displacement)	4.19 inch	4.19 inch
Stroke	3.750 inch	3.750 inch
Piston Displacement	413 Cubic Inch	413 Cubic Inch
Compression Ratio (Premium Fuel)	9.6 to 1	10.1 to 1
Compression Pressure with Engine warm, spark plugs removed, wide open throttle at a minimum cranking speed of 100 rpms with automatic transmission	130-165 psi	130-165 psi
120 rpms with standard transmission	125-155 psi	125-155 psi
Firing Order	1-8-4-3-6-5-7-2	1-8-4-3-6-5-7-2
CYLINDER NUMBERING (FRONT TO REAR)		
Left Bank	1-3-5-7	1-3-5-7
Right Bank	2-4-6-8	2-4-6-8
CYLINDER BLOCK		
Cylinder Bore (Standard)	4.1870-4.1890	4.1870-4.1890
Cylinder Bore out-of-round (Maximum allowable before reconditioning)	.005"	.005"
Cylinder Bore Taper (Maximum allowable before reconditioning)	.010"	.010"
Reconditioning Working Limits (for taper and out-of-round)	.001"	.001"
Maximum Allowable Oversize (Cylinder Bores)	.040"	.040"
Tappet Bore Diameter	.9050-.9058"	.9050-9058"
Distributor Lower Drive Shaft Bushing (Press fit in cylinder block)	.0005-.0040"	.0005-.0040"
Ream to	.4865-.4880"	.4865-.4880"
Shaft to Bushing Clearance	.0007-.0027"	.0007-.0027"
CRANKSHAFT		
Type	Fully Counter-Balanced	Fully Counter-Balanced
Bearings	Steel Backed Babbitt	Steel Backed Babbitt
Journal Diameter	2.7495-2.7505"	2.7495-2.7505"
Crank Pin Diameter	2.374- 2.375"	2.374- 2.375"
Maximum Out-of-Round Permissible	.001"	.001"
Number of Main Bearings	5	5
Clearance Desired (Bearing Installed I.D. Minus Journal O.D.)	.0005 to .0015"	.0005 to .0015"
Maximum Clearance allowable Before Reconditioning	.0025"	.0025"
End Play	.002 to .007"	.002 to .007"

ENGINE SPECIFICATIONS Continued

	FirePower 390	FirePower 360
Thrust Taken By	No. 3 Main Bearing	No. 3 Main Bearing
Finish at Rear Seal Surface	Diagonal Knurling	Diagonal Knurling
Interchangeability of Bearings	Upper Nos. 2, 4, 5 Lower Nos. 1, 2, 4, 5	Upper Nos. 2, 4, 5 Lower Nos. 1, 2, 4, 5
MAIN BEARINGS (Service)		
All available in standard and the following undersizes	.001, .002, .003, .010, .012"	.001, .002, .003, .010, .012"
CONNECTING RODS AND BEARINGS		
Type	Drop Forged "1" Beam	Drop Forged "1" Beam
Length (Center to Center)	6.766 to 6.770"	6.766 to 6.770"
Weight (less Bearing Shells)	846 ± 4 GMS	846 ± 4 GMS
Bearings	Steel Backed Babbitt	Steel Backed Babbitt
Diameter and Length	2.376 x .927"	2.376 x .927"
Clearance Desired (Bearing installed I.D. Minus Journal (O.D.)	.0005 to .0015"	.0005 to .0015"
Maximum Allowable Before Reconditioning	.0025"	.0025"
Side Clearance	.009 to .017"	.009 to .017"
Bearings for Service	Standard .001, .002, .003, .010, .012" Undersize	Standard .001, .002, .003, .010, .012" Undersize
Piston Pin Bore Diameter	1.0925 to 1.0928"	1.0925 to 1.0928"
CAMSHAFT		
Drive	Chain	Chain
Bearings	Steel Backed Babbitt	Steel Backed Babbitt
Number	5	5
Thrust Taken By	Cylinder Block	Cylinder Block
Clearance Desired (Bearing Installed I.D. Minus Journal O.D.)	.001 to .003"	.001 to .003"
Maximum Allowable Before Reconditioning	.005"	.005"
CAMSHAFT BEARING JOURNALS		
Diameter		
No. 1	1.998-to 1.999"	1.998 to 1.999"
No. 2	1.982 to 1.983"	1.982 to 1.983"
No. 3	1.967 to 1.968"	1.967 to 1.968"
No. 4	1.951 to 1.952"	1.951 to 1.952"
No. 5	1.748 to 1.749"	1.748 to 1.749"
CAMSHAFT BEARINGS		
Diameter (after reaming)		
No. 1	2.000 to 2.001"	2.000 to 2.001"
No. 2	1.984 to 1.985"	1.984 to 1.985"
No. 3	1.969 to 1.970"	1.969 to 1.970"

ENGINE SPECIFICATIONS - Continued

	FirePower 390	FirePower 360
No. 4	1.953 to 1.954"	1.953 to 1.954"
No. 5	1.750 to 1.751"	1.750 to 1.751"
TIMING CHAIN		
Adjustment	None	None
Number of Links	50	50
Pitch	.50"	.50"
Width	.88"	.88"
TAPPETS		
Type	Mechanical	Hydraulic
Clearance in Cylinder Block	.0005 to .0018"	.0005 to .0018"
Body Diameter	.9040 to .9045"	.9040 to .9045"
Oversize Available for Service	.001, .008"	.001, .008"
Valve Tappet Clearance - (Engine Cold)		
Intake	.017"	
Exhaust	.028"	
PISTONS		
Type	Horizontal Slot w/Steel Struts	Horizontal Slot w/Steel Struts
Material	Aluminum Alloy Tin Coated	Aluminum Alloy Tin Coated
Land Clearance	.032" to .040"	.032" to .040"
Clearance at Top of Skirt	.0003" to .0013"	.0003" to .0013"
Weight (Standard Through .040 Oversize)	780 grms.	780 grms.
Piston Length (Overall)	3.96 in.	3.96 in.
Ring Groove Depth		
No. 1	.216 in.	.216 in.
No. 2	.216 in.	.216 in.
No. 3	.206 in.	.206 in.
Pistons for Service	Standard, .005", .020", .040", Oversize	Standard, .005", .020", .040", Oversize
PISTON PINS		
Type	Press Fit In Rod	Press Fit in Rod
Diameter	1.0935 to 1.0937"	1.0935 to 1.0937"
Length	3.555 to 3.575"	3.555 to 3.575"
Clearance in Piston	.00045 to .00075"	.00045 to .00075"
Interference in Rod	.0007 to .0012"	.0007 to .0012"
Piston Pins for Service	Standard Only	Standard Only
Direction Offset in Piston	Toward Right Side of Engine	Toward Right Side of Engine

PISTONS SPECIFICATIONS - Continued

PISTON RINGS	FirePower 390	FirePower 360
PISTON RINGS		
Number of Rings per Piston	3	3
Compression	2	2
Oil	1	1
Width of Rings		
(Compression)	.0775 to .0780"	.0775 to .0780"
(Oil)	.1860 to .1865"	.1860 to .1865"
Piston Ring Gap (all)	.013 to .025"	.013 to .025"
RING SIDE CLEARANCE		
(Compression)		
Upper	.0015 to .0030"	.0015 to .0030"
Intermediate	.0015 to .0030"	.0015 to .0030"
(Oil)	.0010 to .0030"	.0010 to .0030"
VALVES - Intake		
Material	SAE 1041 Steel	SAE 1041 Steel
Head Diameter	2.08"	2.08"
Stem Diameter	.372 to .373"	.372 to .373"
Stem Oversize Available for Service	Standard, .005, .015, .030"	Standard, .005, .015, .030"
Stem to Guide Clearance	.001 to .003"	.001 to .003"
Maximum Allowable before Reconditioning	.004"	.004"
Angle of Seat	45°	45°
Adjustment	.017"	.017"
Lift	.445"	.430"
VALVES - Exhaust		
Material	Nitrogen Treated Manganese Chromium Nickle Steel	Nitrogen Treated Manganese Chromium Nickle Steel
Head Diameter	1.75"	1.60"
Stem Diameter	.371 to .372"	.371 to .372"
Stem Oversize Available for Service	Standard, .005, .015, .030"	Standard, .005, .015, .030"
Stem to Guide Clearance	.002 to .004	.002 to .004
Maximum Allowable Before Reconditioning	.006"	.006"
Angle of Seat	45°	45°
Adjustment	.028"	.028"
Lift	.451"	.430"

EXHAUST VALVES SPECIFICATIONS - Continued

	FirePower 390	FirePower 360
VALVE SPRINGS		
Number	16	16
Free Length	2.21"	2.21"
Load When Compressed to (Valve Closed)	85-95 lbs. @ 1.860"	95-105 lbs. @ 1.860"
Load When Compressed to (Valve Open)	216-234 lbs. @ 1.43"	187-203 lbs. @ 1.43"
Valve Springs I.D.	1.070 to 1.090"	1.070 to 1.090"
Valve Spring Installed Height (Spring Seat to Retainer)	1.830 to 1.890"	1.830 to 1.890"
Surge Damper	Spiral Type	Spiral Type
VALVE TIMING		
Intake - Opens	18° BTC	24° BTC
Closes	70° ABC	64° ABC
Duration	268°	268°
Exhaust - Opens	66° BBC	64° BBC
Closes	22° ATC	24° ATC
Duration	268°	268°
Valve Opening Overlap	40°	40°
VALVE GUIDES		
Type	Cast In Head	Cast In Head
Guide Bore Diameter	.374-.375" Std.	.374-.375" Std.
CYLINDER HEAD		
Number Used	2	2
Combustion Chamber	Wedge Type	Wedge Type
Valve Seat Runout (Maximum)	.002"	.002"
Intake Valve Seat Angle	45°	45°
Intake Seat Width	.060 to .085"	.060 to .085"
Exhaust Valve Seat Angle	45°	45°
Exhaust Seat Width	.040 to .060"	.040 to .060"
Cylinder Head Gasket Compressed (thickness)	.022"	.022"
ENGINE LUBRICATION		
Pump Type	Rotor Full Pressure	Rotor Full Pressure
Capacity (qts.)	5 *	5 *
Pump Drive	Camshaft	Camshaft
Operating Pressure at 40 to 50 mph	45 to 65 lbs.	45 to 65 lbs.
Oil Filter Type	Full Flow	Full Flow
Pressure Drop Resulting from Clogged Filter	7 to 9 lbs.	7 to 9 lbs.

* When Filter is Replaced, Add 1 Quart.

VALVE TIMING

FIREPOWER 360 ENGINE

(1) Turn crankshaft until the No. 6 exhaust valve is closing and the No. 6 intake valve is opening.

(2) Insert a 1/4 inch spacer between the rocker arm pad and the stem tip of the No. 1 intake valve (second valve on the left bank).

(3) Install a dial indicator so that the plunger contacts the valve spring retainer as nearly perpendicular as possible.

(4) Allow the spring load to bleed the tappet down giving in effect a solid tappet. Zero the indicator.

(5) Turn the crankshaft clockwise (normal running direction) until the intake valve has opened .034 inch. The timing on the timing indicator, located on the chain case cover, should read from 10 degrees BTDC to 2 degrees ATDC. If the reading is not within the specified limits; Inspect the timing sprocket index marks, inspect the timing chain for wear, and determine the accuracy of the DC mark on the timing indicator. Turn the crankshaft counter-clockwise until the valve is closed and remove the spacer.

CAUTION: Do not turn the crankshaft any further clockwise, as the valve spring might bottom and result in serious damage.

FIREPOWER 390 ENGINE

(1) Rotate the crankshaft until the No. 6 exhaust valve is closing and the No. 6 intake is opening. Turn the rocker arm adjusting screw down to zero clearance plus 1/2 turn on No. 1 intake valve. Install a dial indicator so that the indicator pointer contacts the retainer as near to the 90° angle as possible. Adjust the dial indicator to zero.

(2) Turn the crankshaft clockwise (normal running direction) until the valve has opened .033 inch. The timing pointer should read 10° BTDC to 2° ATDC.

(3) If the reading is not within the above specified limits: note the sprocket index marks. Inspect the timing chain for wear. Determine the accuracy of the DC mark on the vibration damper.

(4) Remove the dial indicator, back off the adjusting screw, adjust the valve clearance to specifications .017 inch intake, .028 inch exhaust cold.

Closed Crankcase Ventilation System

The system consists of a ventilation valve installed in the outlet vent on the cylinder head cover, and a tube. The tube is connected between the outlet vent and the lower part of the carburetor throttle body. The function of the valve is to regulate the flow of crankcase ventilation at various throttle positions. The ventilation valve (Fig. 8) offers greater reliability and helps reduce the regular maintenance costs. A spring-loaded plunger inside the orifice of the new valve is kept in constant motion by changes in engine manifold vacuum. This scouring action keeps the orifice free longer of sticky deposits and ensures a more positive flow to the intake manifold.

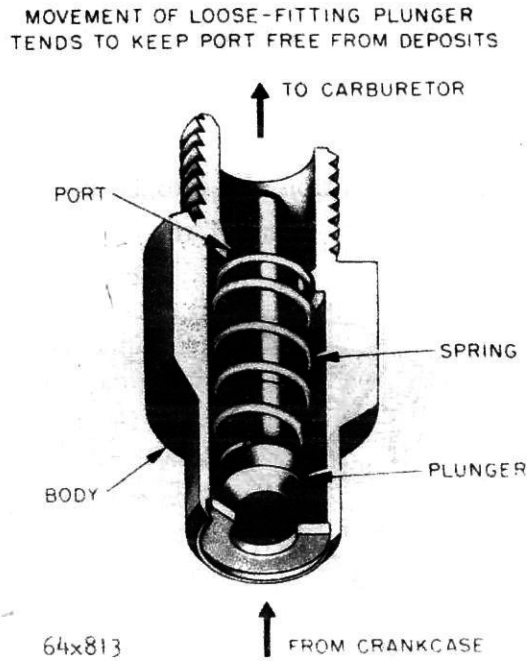

Fig. 8 - Crankcase Ventilator Valve

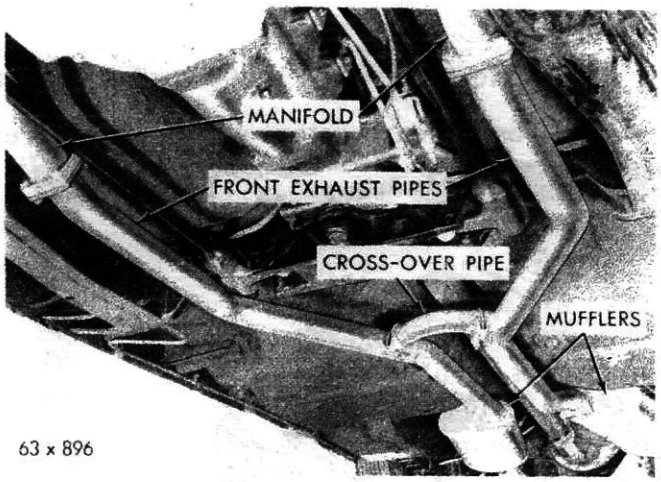

Fig. 9 - Exhaust System, (Firepower 390 Engine)

GROUP 11 - EXHAUST SYSTEM

A dual exhaust system is used on the Chrysler 300K, the Firepower 360 and the 390 engines. Balancing of the exhaust systems is accomplished by a cross-over pipe placed in the center of the exhaust system on the Firepower 390 Engine, (Fig. 9).
The removal of the access panel from under the front fenders on the Firepower 390 engine, will permit easy removal and installation of the exhaust manifold. The Firepower 360 engine is equipped with a Manifold Heat Control Valve and its purpose is to direct hot exhaust gases to a heat chamber in the intake manifold and pre-heat the fuel-air mixture. By piping exhaust gases directly to the base of the carburetor (Fig. 10) the heat control valve has been eliminated on the Firepower 390 engine.

The service procedures for removing and installing the mufflers, tail pipes and brackets are outlined in the 1964 Imperial and Chrysler Service Technical Manual.

GROUP 14 - FUEL SYSTEM

Two engines are available for the C-300K models; Firepower 360 and an optional Firepower 390 engine.

The Firepower 360 engine has a compression ration of 10.1 to 1 with one 4-barrel carburetor and uses premium fuel.

The optional Firepower 390 engine (Fig. 6) has a compression ration of 9.6 to 1 with two 4-barrel carburetors and also uses premium fuel.

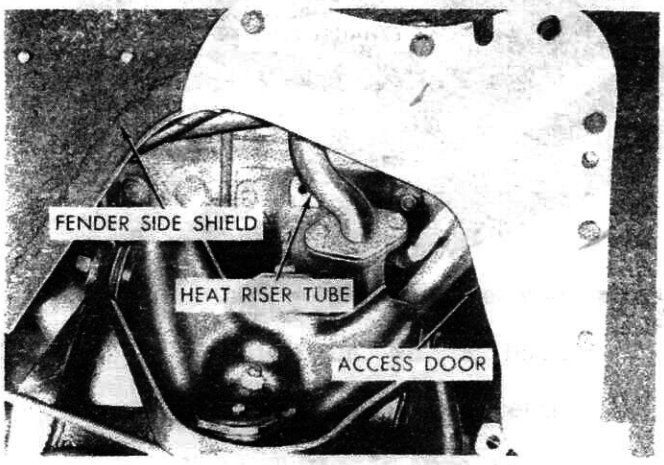

63 x 897

Fig. 10 - Exhaust Heat Riser Tube on FirePower 390 Engine

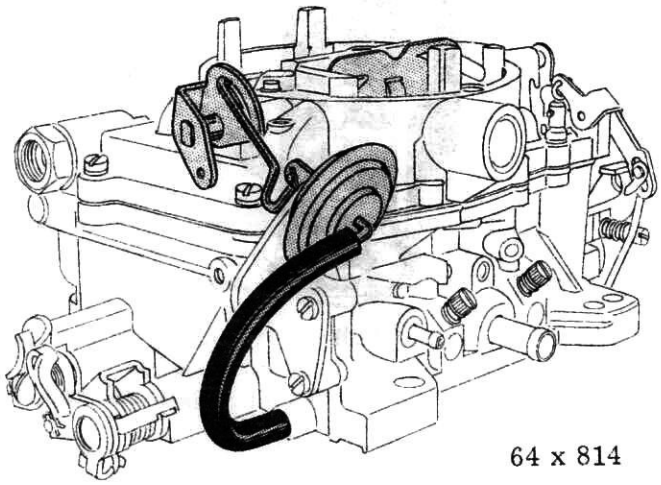

64 x 814

Fig. 11 - AFB Carburetor with Diaphragm Choke Modulator (FirePower 360 Engine)